REVISIONS				
LTR	DESCRIPTION	E.C.N.	DATE	BY/APP'D
A	RELEASE TO DOCUMENT CONTROL	384	07/30/2001	MS/AP

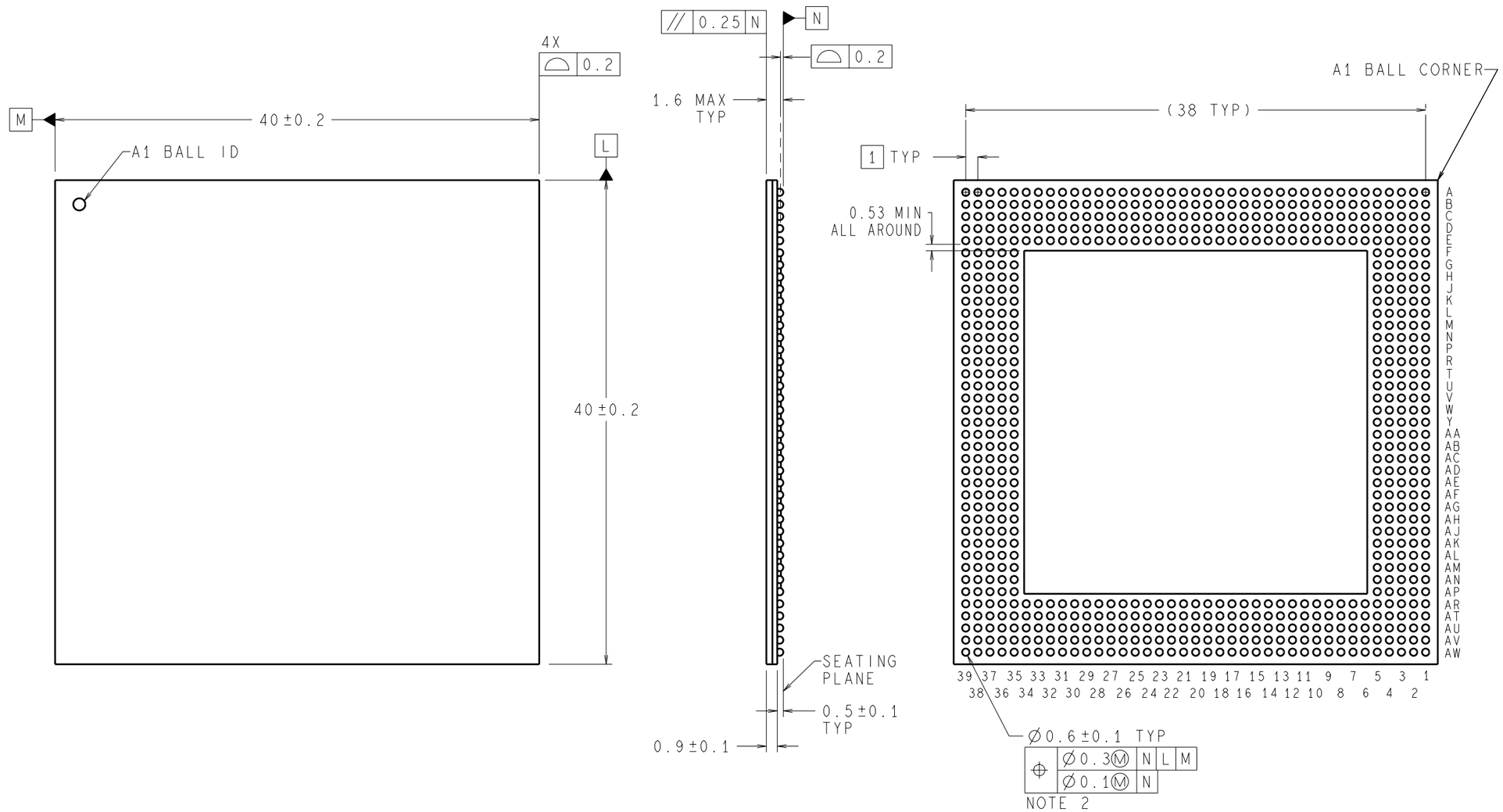

DIMENSIONS ARE IN MILLIMETERS

NOTES: UNLESS OTHERWISE SPECIFIED

1. SOLDER BALL COMPOSITION: Sn 63%,Pb 37%.
2. DIMENSION IS MEASURED AT THE MAXIMUM SOLDER BALL DIAMETER, PARALLEL TO PRIMARY DATUM N.
3. REFERENCE JEDEC REGISTRATION MO-192, VARIATION AAU-1.

APPROVALS	DATE
DRAWN MARTA SUCHY	07/30/2001
DFTG. CHK. THANH LEQUANG	07/30/2001
ENGR. CHK. ANINDYA PODDAR	07/30/2001

PROJECTION INCH [MM]

National Semiconductor
2900 Semiconductor Dr, Santa Clara, CA 95052-8090

TSBGA,
40 X 40 X 1.6mm,
680 BALL, 1.0mm PITCH

SCALE	SIZE	DRAWING NUMBER	REV
N/A	C	(SC)MKT-UGC680A	A

DO NOT SCALE DRAWING | SHEET 1 of 1